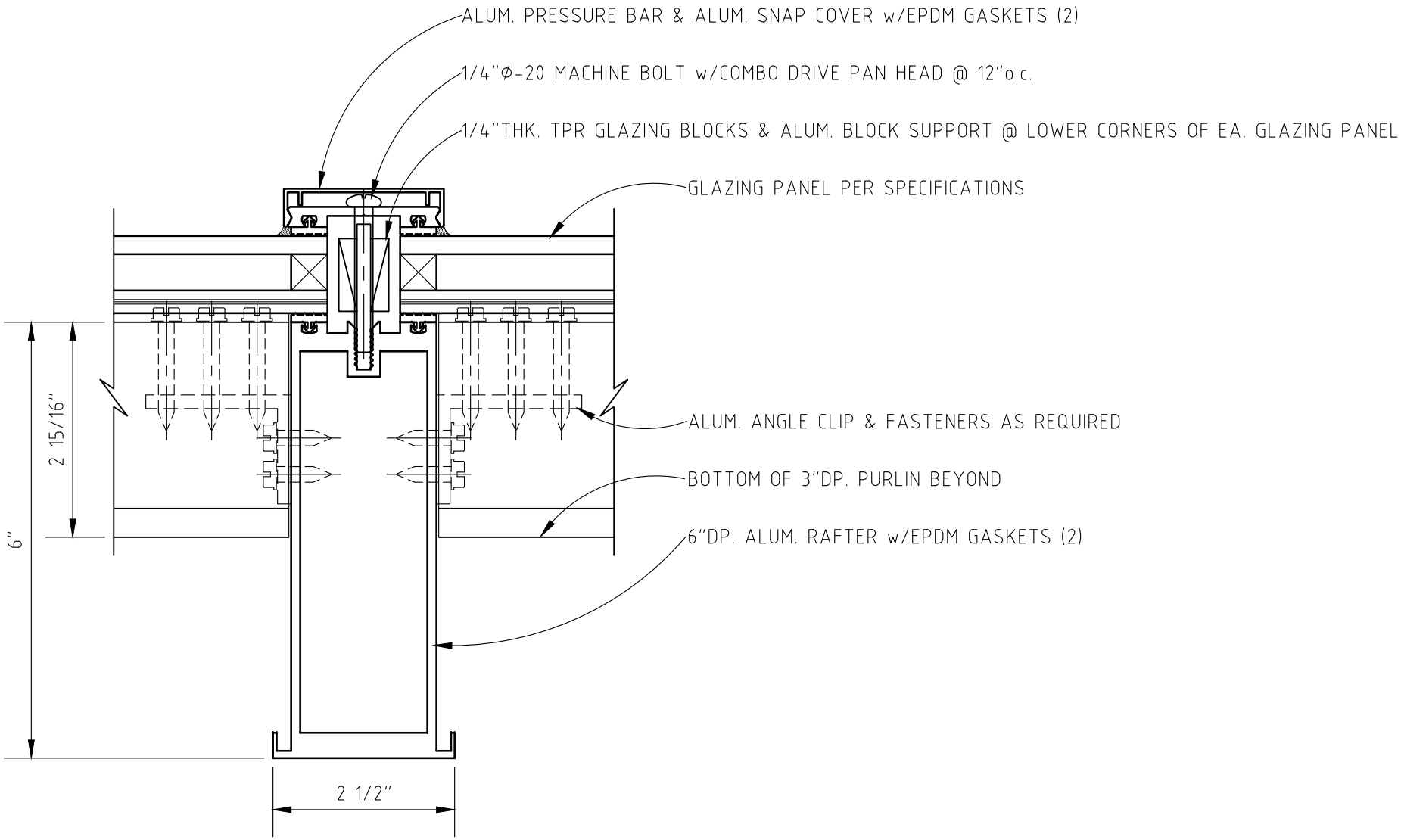

SKYCO SKYLIGHTS 949-629-4090	"A-3" RAFTER DETAIL	HALF SCALE	DRAWING #: SKC-020