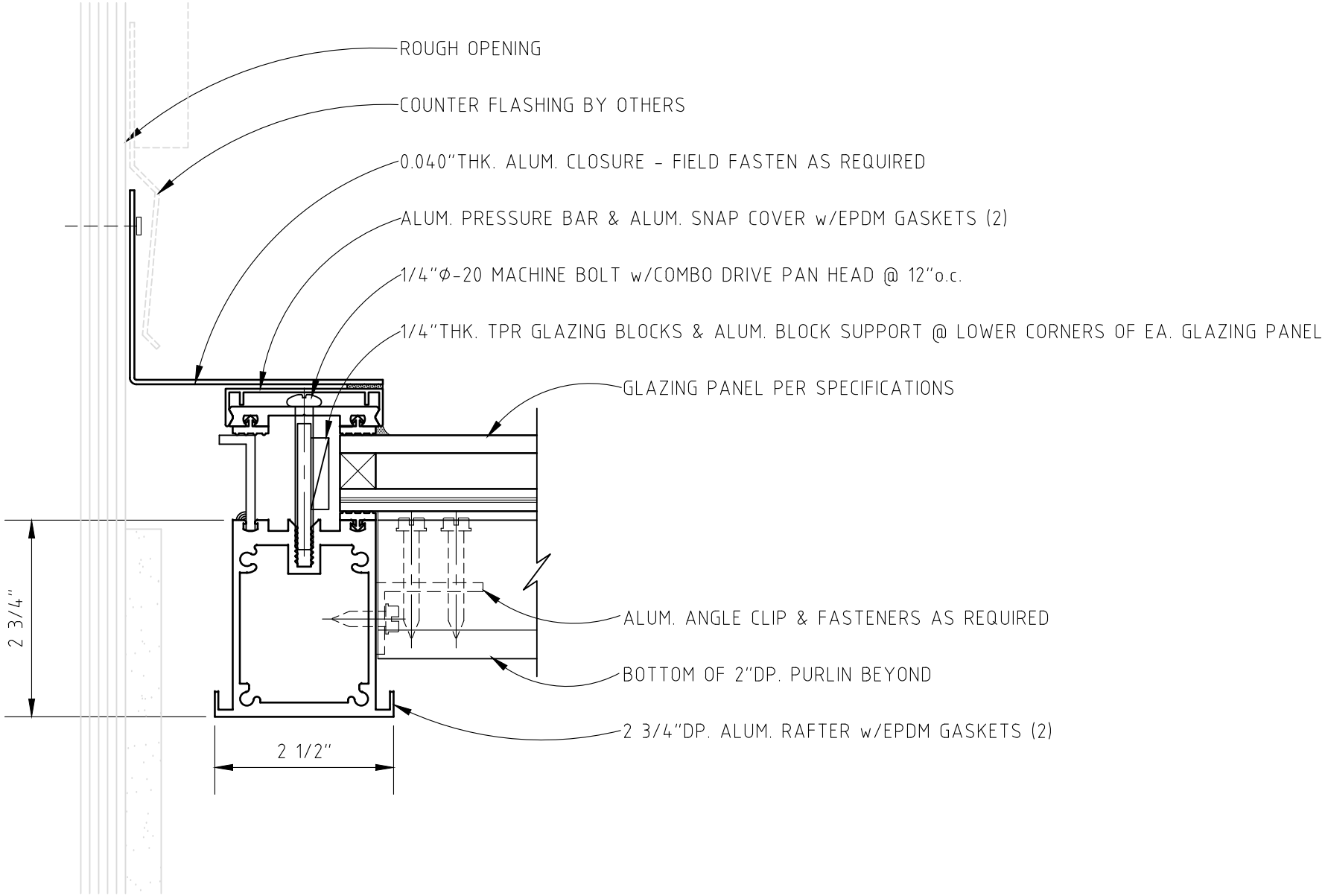

SKYCO SKYLIGHTS 949-629-4090

"B-1" END RAFTER DETAIL

HALF SCALE

DRAWING #: SKC-022