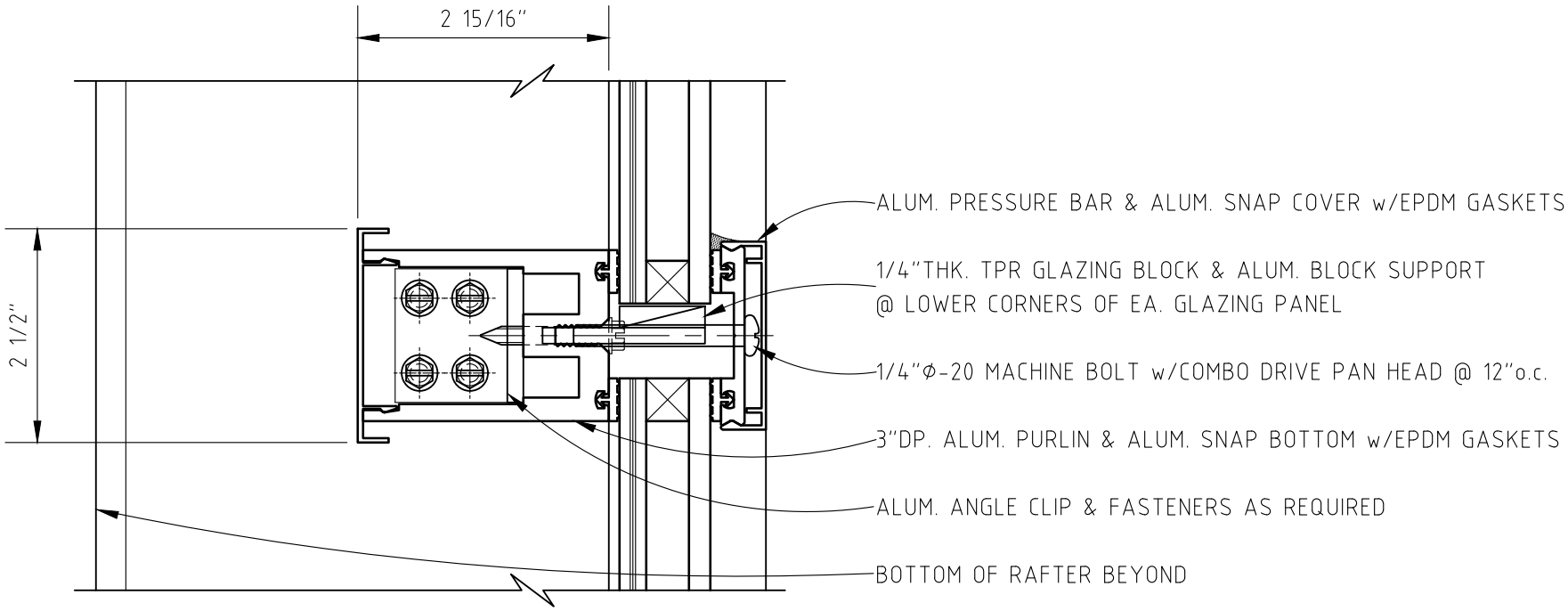

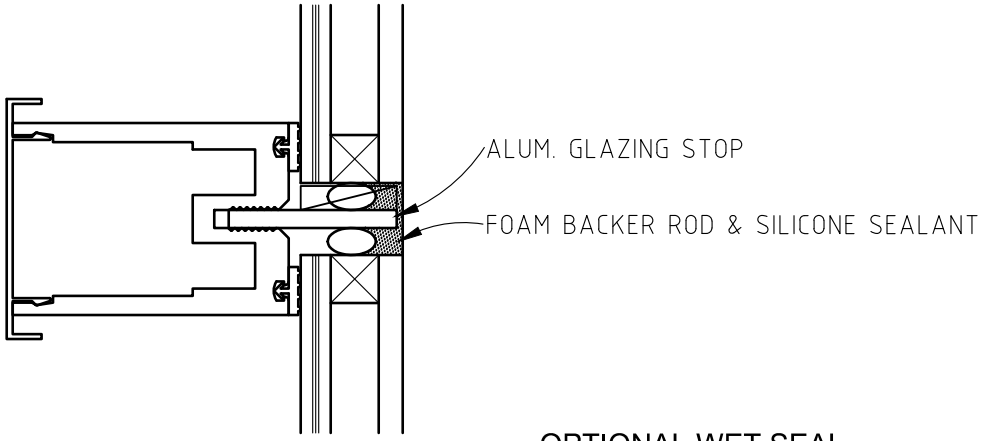

OPTIONAL WET SEAL

SKYCO SKYLIGHTS 949-629-4090	"H-2" MID-SPAN PURLIN DETAIL	HALF SCALE	DRAWING #: SKC-041