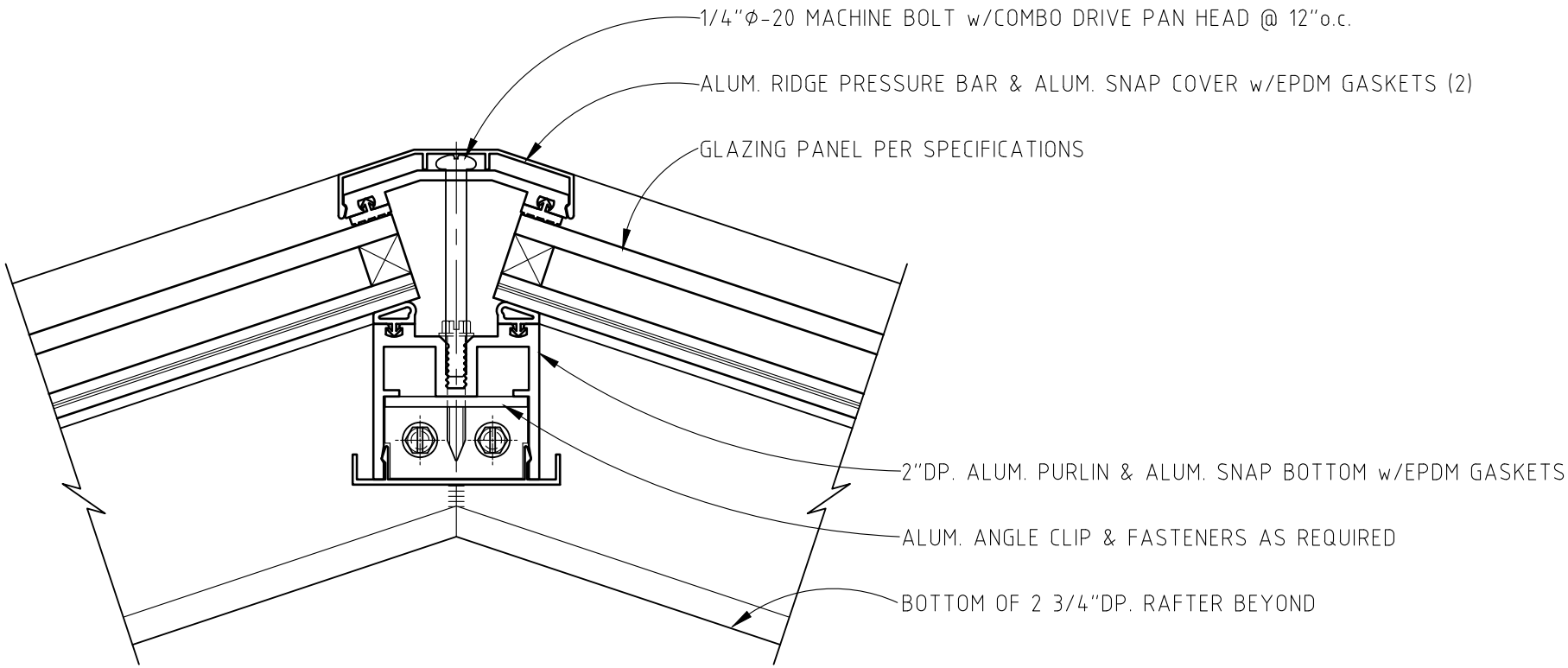

SKYCO SKYLIGHTS 949-629-4090	"I-1" RIDGE DETAIL	HALF SCALE	DRAWING #: SKC-042